INSTALLATION GUIDE

CLIPON 1.0

DRILL TONNEAU COVER

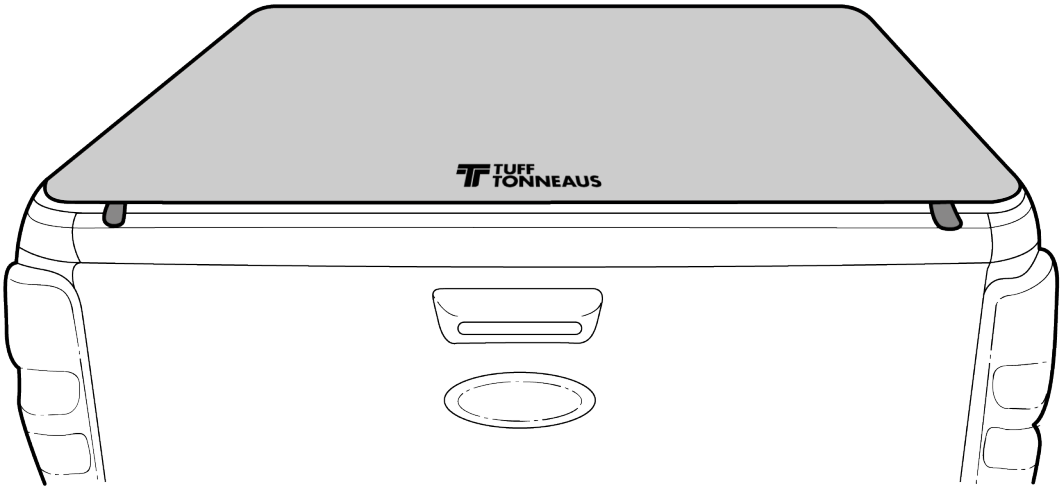

Before installing!
Make sure Vehicle, Year, Fitment and Style matches your vehicle.

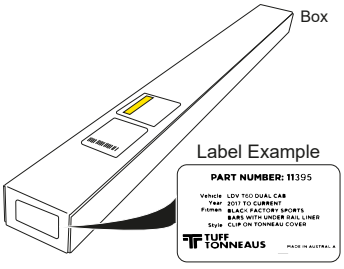

PARTS SUPPLIED

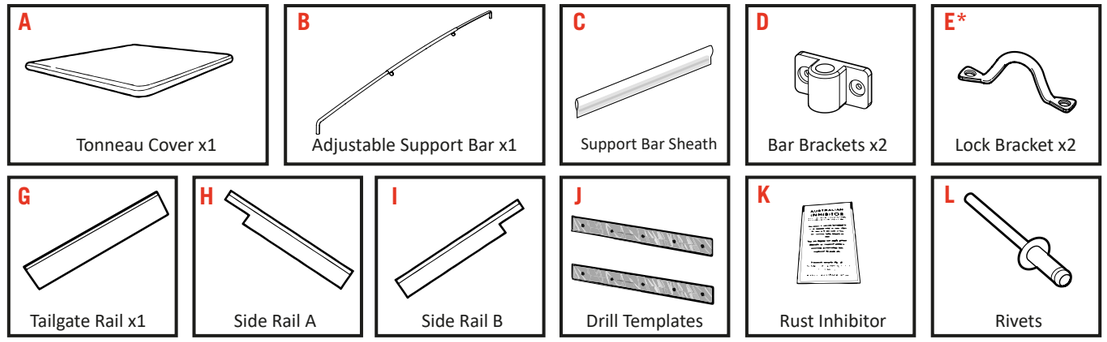

* Sport Bar models only require 1pcs of Lock Bracket "E"

Additional parts

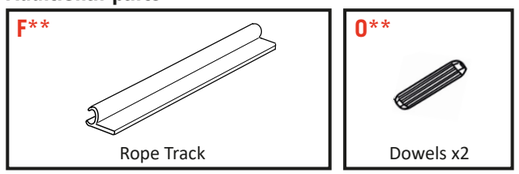

F & O** supplied for -**

10499 Holden	11395 LDV
10520 Holden	10122 Mitsubishi
10335 Foton	10969 Mitsubishi
11258 GWM	11373 Nissan
10568 Isuzu	11387 Nissan
10982 Isuzu	10053 Toyota
11049 LDV	10058 Toyota
11237 LDV	

F supplied for -**

10050 GWM	10891 Nissan
10099 Mitsubishi	11000 Toyota
10761 Nissan	11317 Toyota
10679 Nissan	10808 VW
11807 Mitsubishi	

****Only included for specified cars (See Step 1 on Page 4)**

SPORT BAR MODELS

Additional parts

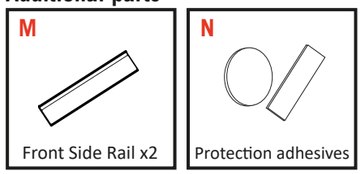

EXTENDED CAB MODELS

Also known as: Space, Extra, Mega and Freestyle cabs

Additional parts for longer tubs

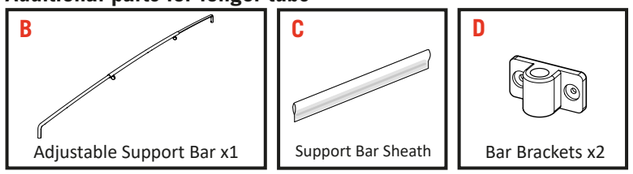

Additional parts not included: Ford PX #10010

SAFETY NOTES

- Ensure that appropriate Personal Protective Equipment is used.
- During the accessory fitment, ensure all Australian automotive and dealership safety practices are followed.
- Always refer to the vehicle's workshop manual when removing components.
- Never use a powered drill to screw the bolts. Always do this by hand with the tool provided to prevent damage to the fasteners.

TOOLS REQUIRED

- Marker
- Safety Glasses
- Caulking Gun + Silicone adhesive
- 4mm Drill Bit
- Drill
- Rivet Gun
- Tape Measure

FINAL ASSEMBLY

NO SPORT BARS

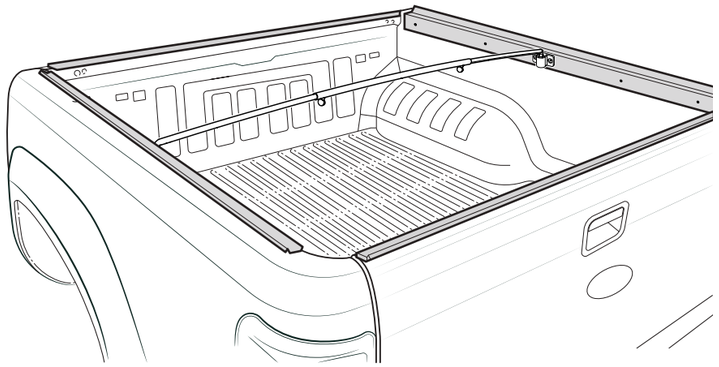

SPORT BAR MODELS

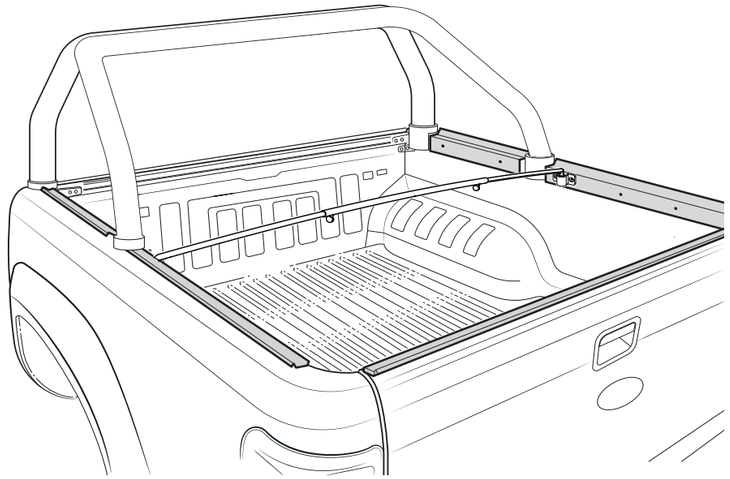

HEADBOARD MODELS

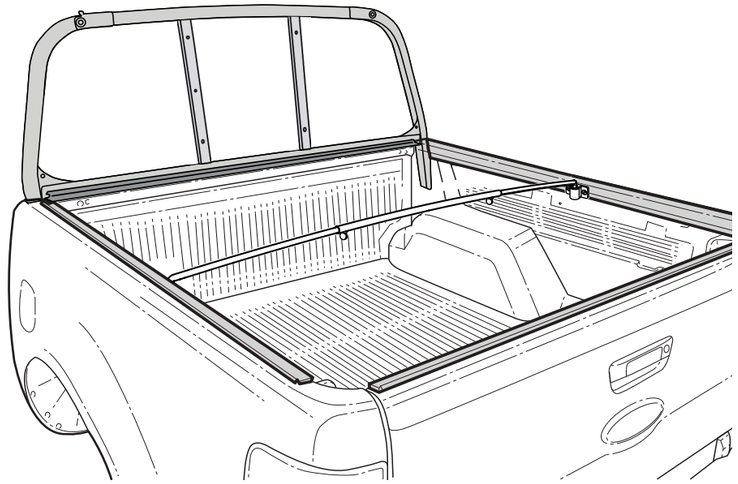

NOTE: THIS VISUAL REPRESENTATION MAY NOT APPLY TO ALL VEHICLES. Refer to APPENDIX if stated.

1 PREPARE THE ROPE TRACK (If supplied)

NOTE: For the following models refer to Appendix:
FORD 10129, JMC 10635, MITSUBISHI 10926, 10907 & 10642, VW 10881 & 11065

STEP 1 Select the correct alignment method (1 or 2) based on your part number.

METHOD 1

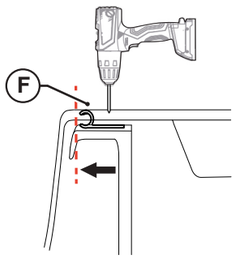

METHOD 2

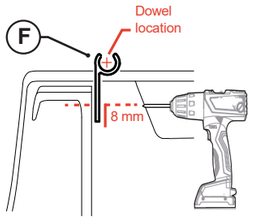

Part No's

10499 Holden	11395 LDV
10520 Holden	10122 Mitsubishi
10335 Foton	10969 Mitsubishi
11258 GWM	11373 Nissan
10568 Isuzu	11387 Nissan
10982 Isuzu	10053 Toyota
11049 LDV	10058 Toyota
11237 LDV	11807 Mitsubishi
11936 Nissan	

10050 GWM	10891 Nissan
10099 Mitsubishi	11000 Toyota
10761 Nissan	11317 Toyota
10679 Nissan	10808 VW

STEP 2 Drill 5 holes evenly spaced through the rope track and into the tub.

METHOD 1

- Sit the flat side of the rope track on top of the edge of the tub. Ensure the rope track is positioned in the center of both sides of the tub.

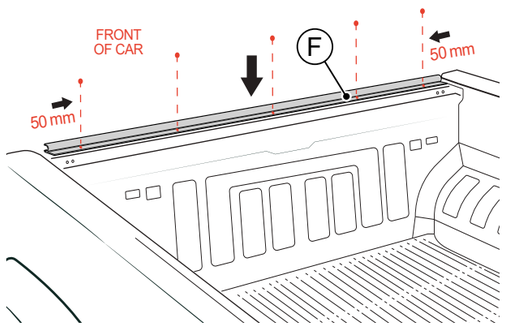

OR

METHOD 2

- Insert the dowel pieces into the aluminium rope track and rest on the side rails of tub. Ensure the rope track is positioned flush against the tub face.

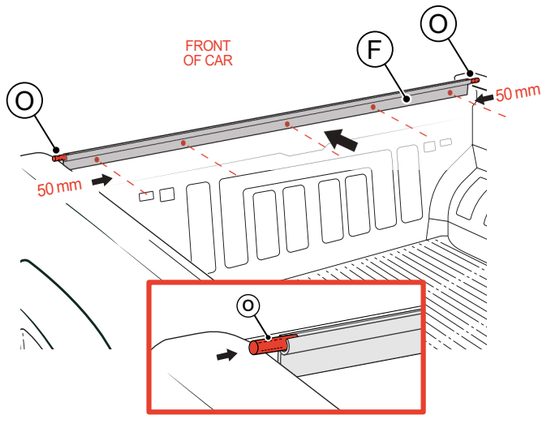

2 ATTACH THE ROPE TRACK (If supplied)

NOTE: For the following models refer to Appendix:
FORD 10129, JMC 10635, MITSUBISHI 10926, 10907 & 10642, VW 10881, GWM 10050

STEP 1 Apply a bead of silicon to the contact surface shown on page 4 (edge that comes in contact with the edge of the tub).

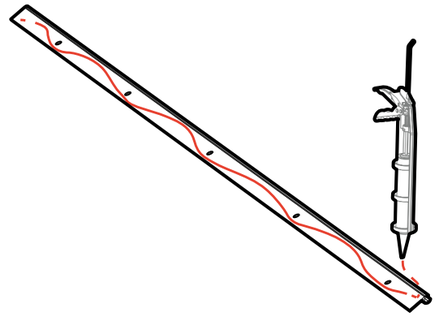

STEP 2 Place the rope track back into position. Ensure your drill holes in step 1 line up, then rivet the rope track into place.

METHOD 1

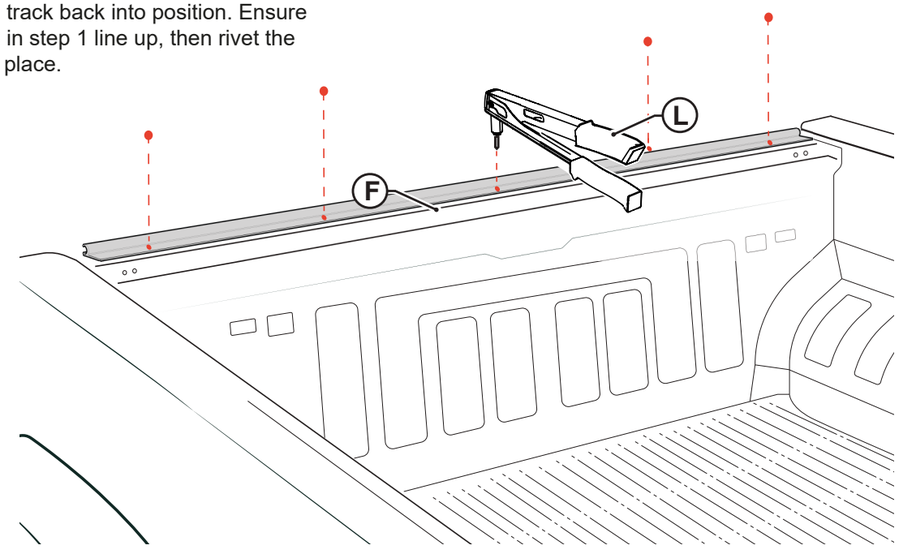

METHOD 2

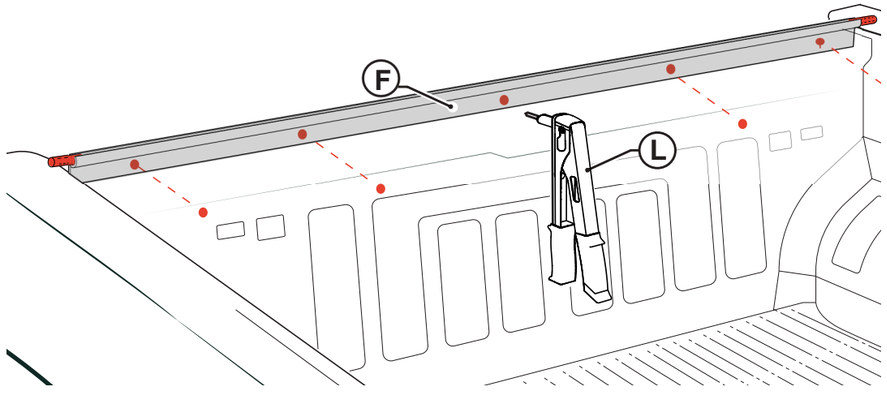

NOTE: THIS VISUAL REPRESENTATION MAY NOT APPLY TO ALL VEHICLES

3 ATTACH THE SIDE RAILS

NOTE: For the following models refer to Appendix:
LDV 11066, GWM Steed 11258, Mitsubishi 10642

STEP 1

• Clean the top surface of your vehicle's tub (using alcohol based wipes) and allow to dry.

• Remove the red backing tape from the underside of the side aluminium pieces. Press down sticky surface flush with the top of the tub (see below).

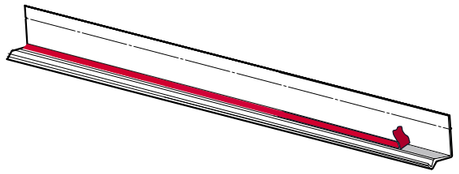

STEP 2

NOTE: "V" Notches in the template to line up bottom of the rail

• Position the side template along the Front & Bottom edge of the rail. Mark the locations onto the side rail with the Non-permanent marking pen.

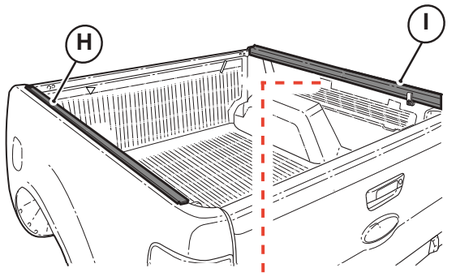

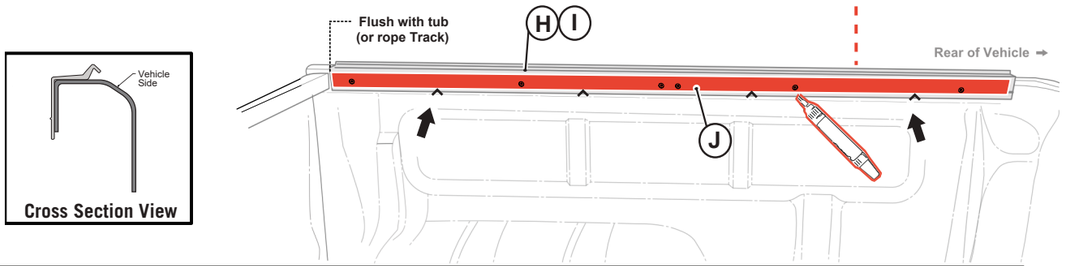

STEP 3

• Use a Drill (4mm bit) to drill the holes at each of the marked locations - drilling both the aluminium and into the side edge of the tub.

• Apply Rust Inhibitor **K** to the drilled holes of the tub.

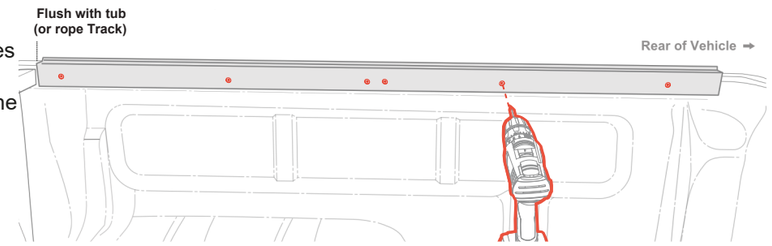

STEP 4

• Attach the bar bracket by placing a 4mm rivet through both holes of the bracket and through the 2 center holes drills in the previous step.

• Continue to rivet the drilled holes, securing the rail onto the inside edge of your tub.

• Insert the Adjustable Support Bar **B** into the Support Bar Sheath **C.** Then insert each end of the Adjustable Support Bar **B** in the Bar Bracket.

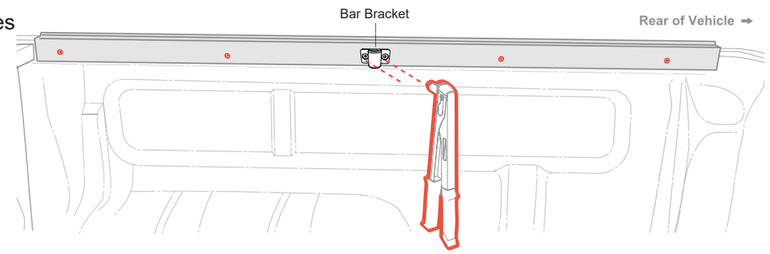

4 ATTACH THE TAILGATE RAIL

STEP 1

Remove the Tailgate Liner & Strip (If fitted).

Clean the top surface of the car and Remove the red backing tape from the underside of the tailgate rail. Center the extrusion and align the inside edge of the rail with the inside edge of the tailgate.

Press Down firmly to ensure adhesion.

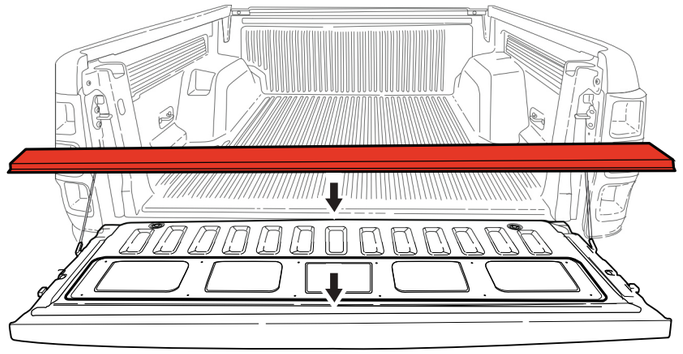

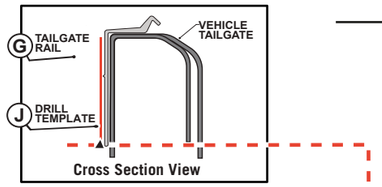

STEP 2

NOTE: "V" Notches in the template to line up bottom of the rail.

Position the tailgate template along the bottom edge of the tailgate rail. Mark the locations onto the tailgate rail with the Non-permanent making pen.

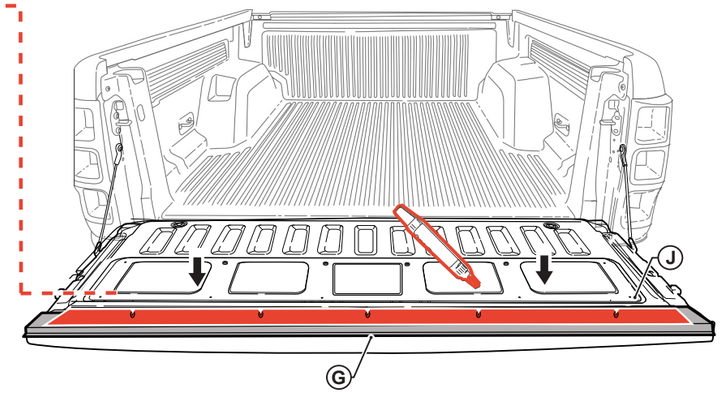

STEP 3

Use a Drill (4mm Bit) to drill the holes at each of the marked locations through the aluminium and into the Tailgate.

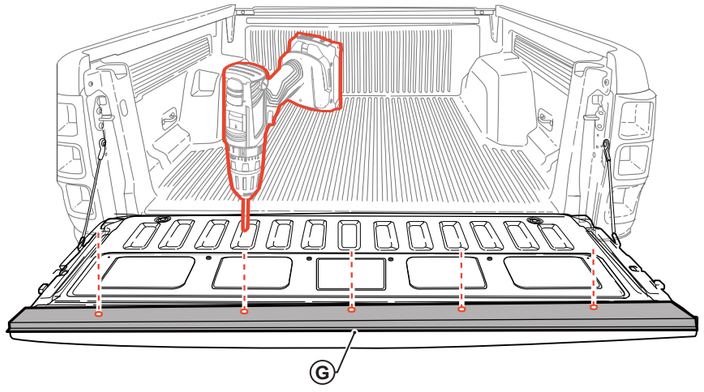

ATTACH THE TAILGATE RAIL (Continued...)

STEP 4

• Rivet the remaining holes, securing the rail onto the inside edge of your tailgate.

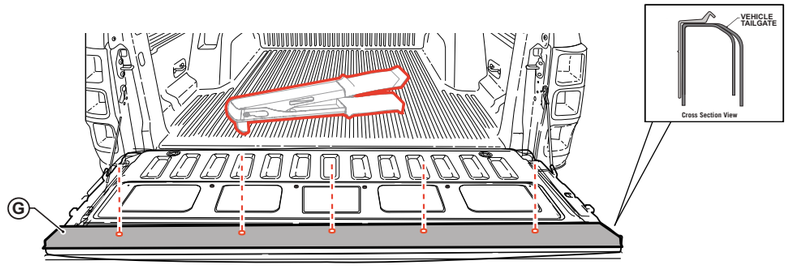

With Tailgate Liner
Finished Appearance

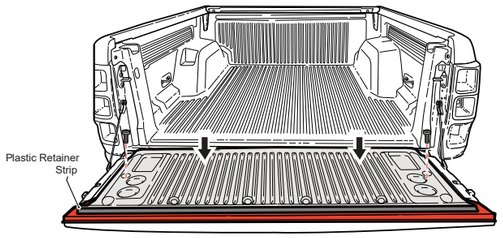

No Tailgate Liner
Finished Appearance

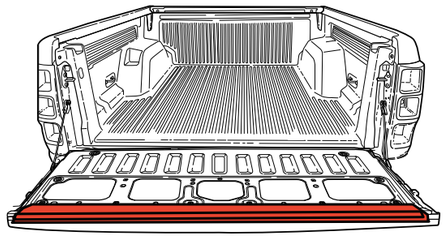

• Fit edges of the tailgate liner into original position and re-install original screws to secure the liner on top of the tailgate rail **G**.

5 FIT THE TONNEAU COVER

Note: Fitment will be tight straight out of the box, but this should loosen up a little after a week.

STEP 1

• Engage the front of cover based on your supplied parts.

Rope Track = Slide the front rope of the cover into the rope track and centre the cover.
J-Retainer = Drop the front of the cover in-between of your tub & cab. Pull the cover upward and ensure it catches on front rail of the tub.
J Retainer into Rope Track = Drop the front of the cover in between of your tub & cab. Pull the cover upward and ensure it catches on Rope track installed in sections 1 and 2 .
J Retainer into Front Rail = Engage J-Retainer over the top section lip.

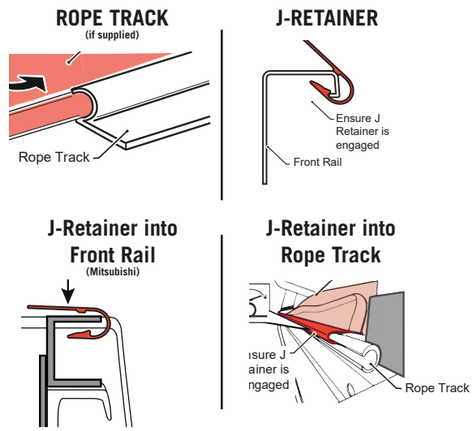

STEP 2

• Engage the back of the cover **first**, followed by the sides.

• Use the pull tabs to assist you opening your cover.

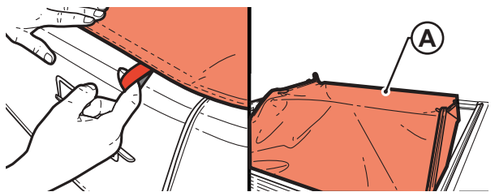

STEP 3

• Apply Protection adhesives **N** to the car's paint where the cover's magnets make contact with the car. (Not-supplied to all models).

6 TONNEAU COVER TETHERING SYSTEM (non-Sport Bar models only)

• Rivet the extra Metal Bracket to the Front Driver Side Rail.
• Untie the end of the rope of the Cover and loop it through the Metal Bracket.
• Re-thread the Washer and tie the end of the rope into a knot.

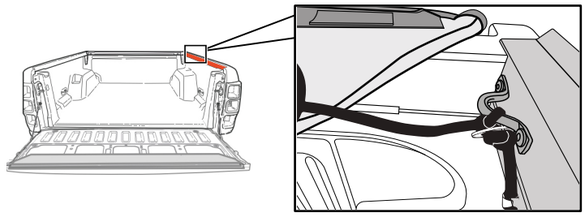

7 FITTING TONNO LOCK (Optional)

Together with a padlock, installing the Tonno Lock provides you with an extremely effective theft deterrent. By riveting it on inside edge of the tub, behind the cab.

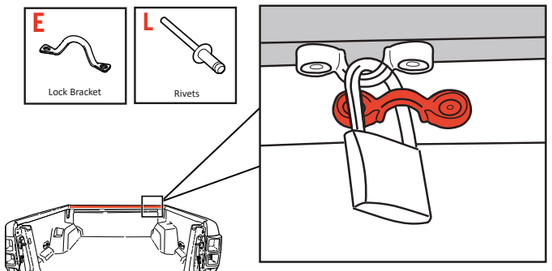

STEPS

• Attach the black lock bracket to the bracket on the tonneau with your padlock, and fit the tarp.
• Getting under the tarp with a torch, place the lock bracket against the body and mark holes with a pen.
• Remove tonneau and drill the marks with a 4 mm drill bit, place the lock bracket in position and rivet.

Lock & Keys not supplied

CONGRATULATIONS! YOU HAVE SUCCESSFULLY INSTALLED YOUR TONNEAU COVER.

Happy with your Cover? Please send a us photo of your ute to: Sales@tto.com.au

- HOW TO USE THE OVERSIZE LOAD SYSTEM

STEP 1

• Place the load into the ute tub then drape the tonneau cover as shown below

STEP 2

• Engage the Rope Hooks from underneath the Tonneau Cover and clip each one onto either the Tub Rail (Holden Commodore/Crewman or Aluminium Rail (all other vehicles)

STEP 3

• Engage all Rope Hooks for Secure Fit

Important The Tonneau Cover is not designed to be a load restraint. You MUST securely tie down your load first and then use the Oversized Load Cover System.

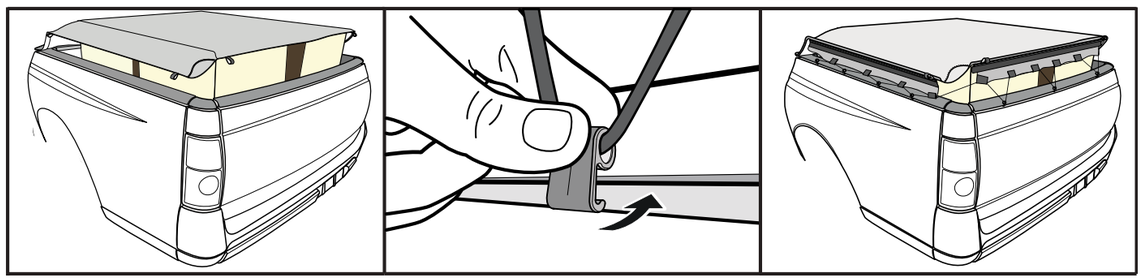

APPENDIX. FORD

10129 FORD PX RANGER DUAL CAB (WITH NEW HEADBOARD)

IMPORTANT: PLEASE REFER TO THE IMAGE BELOW TO CONFIRM THE HEADBOARD ON THE VEHICLE MATCHES THE IMAGE (RIGHT)

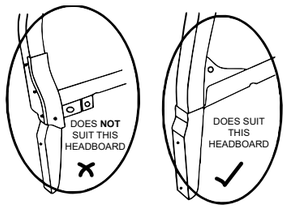

1 ATTACH THE ROPE TRACK

• Measure and drill remaining 5 holes at 262 mm centers and 9mm up from the bottom edge of the rope track as shown in **Figure F1.**

• Sit the flat side of the assembled rope track on the tailgate side of the headboard with the 'C' channel facing upward and align the bottom edge of the rope track with the bottom edge of the headboard then centralise the rope track. **Refer Figure F2.**

• Drill through the holes in the rope track and into the top edge of the tub working from the centre out.

• Apply a bead of silicone to the contact face of the rope track. Then proceed to rivet the rope track into place.

3 to 7 • As per respective pages

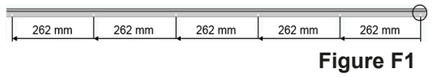

Figure F1

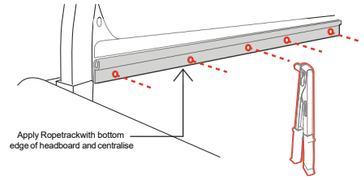

Figure F2

2 ATTACH THE SEAL TAPE

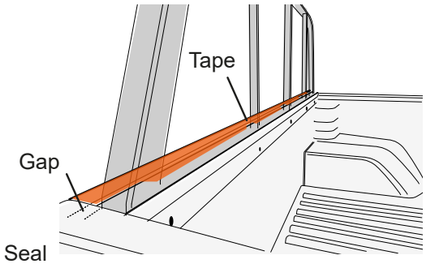

STEP 1

Included in the 10129 Ford Ranger Cover is seal tape to ensure water resitance at the gap between the headboard and the tub's front body.

Required: Tape Measure, Non-permanent marking pen, Scissors.

• Cut 2 pieces from the supplied seal tape 270mm long. Use the supplied Seal Template to mark and cut 1 piece to suit the driver's side of the headboard and 1 piece to suit the passenger side of the headboard.
Refer Figure 16.

• Partially peel the backing paper from the driver's side seal. Align the notched section and the first hole to the vehicle and apply the seal tape to cover the gap between the headboard and the cabin end of the tub. **Refer Figure 17**.

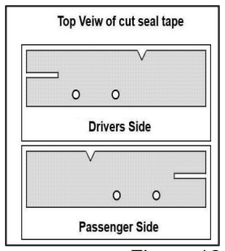

Figure 16

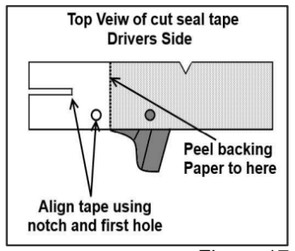

Figure 17

STEP 2

• Required tools: Drill, 4mm Bit, Rivet Gun Use the remainder of the tape to cover the remaining gap between the center section of the headboard and the cabin end of the tub. Overlap the remaining tape evenly at both ends (approx. 30 - 40mm). Refer Figure 18.

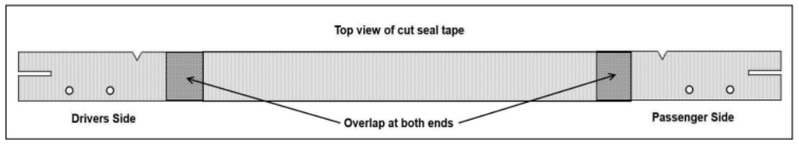

Figure 18

3 to 7 • As per respective pages

APPENDIX. GREAT WALL MOTORS (GWM)

11258 GREAT WALL STEED DUAL CAB (WITH FACTORY SPORTS BARS & OVERAIL LINER)

3 ATTACH THE SIDE RAILS

Additional Parts

STEP 1

• Remove the plastic clips which cover the bolts. Once the remove the plastic clip, undo the bolts by using 6mm hex key. **Refer Figure G1**

Place the **GA** (shim 60x3mm) on the top of plastic and tie down with supplied long **GB** (M8 bolts). **Refer Figure G2**

• Clean the top surfaces of the car and allow to dry. Remove the red backing tape from the underside of aluminium rails **Refer Figure G3**

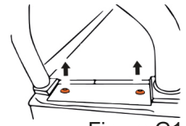

Figure G1

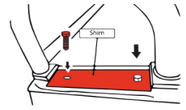

Figure G2

Figure G3

STEP 2

• Ensure the rear lengths (1000mm Long) of aluminium are positioned 5mm behind the rear of the sports bars and the notch is backward to rear. **Refer Figure G4**

STEP 3

• Using the drill templates, locate the templates along the bottom edge of alloy, mark the locations onto aluminium rail. **Refer Figure G4.**
Note: Bottom edge of drill template has "V" notches. And three "V" notches from the side indicate to the rear of vehicle.

STEP 4

• Attach the bar bracket by placing a 4mm Rivet through both holes of the bracket and Rivet into the x2 close drilled locations shown. Then continue to rivet the remaining drilled holes securing the rail onto the inside edge of your tub.

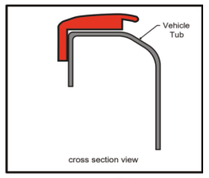

Figure g4

3 to 7 • As per respective pages

10050 GREAT WALL V200/V240 K2 DUAL CAB (2009-2015)

2 ATTACH THE ROPE TRACK

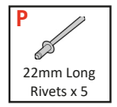

Additional Parts

STEP 1

• Apply silicone bead to the contact surface of the car and Rope Track.

STEP 2

• Use the longer **P** 22mm Rivets for the attachment of the Rope Track & shim to the front of the car.

• Ensure you have x23 Shorter rivets to use for the side rails in step 3.

3 to 7 • As per respective pages

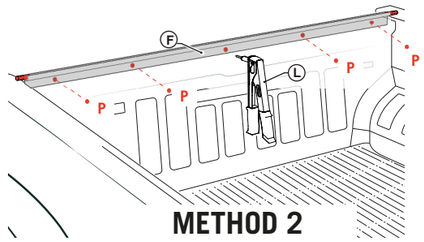

METHOD 2

APPENDIX. LDV & JMC

11066 LDV CREW CAB (WITH HEADBOARD & OVERRAIL LINER)

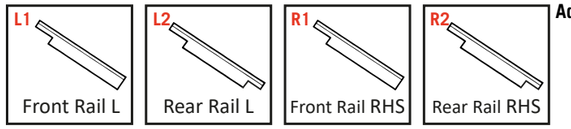

Additional Parts

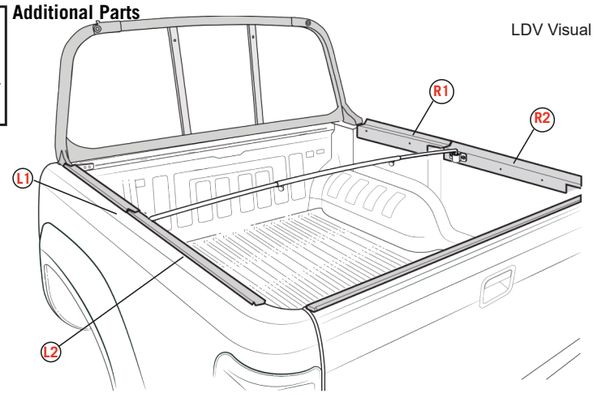

3 ATTACH THE SIDE RAILS

STEP 1

• Clean the top surfaces of the car and allow to dry. Remove the red backing tape from the underside of aluminium rails.

STEP 2

• 630mm length Side Rails to sit towards the front of each side, with the larger notch towards the back.
• 680mm length Side Rails to sit at the rear of each side, with the one notch towards the back.

STEP 3

• Using the drill templates provided mark and drill the locations through the aluminium and into the side edge of the tub.

STEP 4

• Attach the bar bracket by placing a 4mm Rivet through both holes of the bracket and Rivet to the x2 drilled locations shown (left). Continue to rivet the drilled holes securing the rail onto the inside edge of your tub.

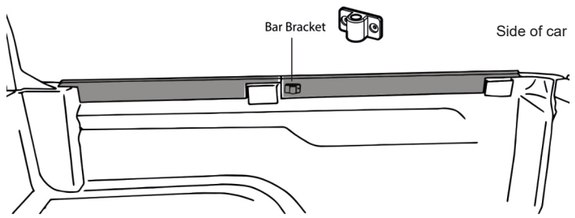

4 to 7 • As per respective pages

10635 JMC Vigus 2015-Current (WITH FACTORY SPORTS BARS)

1 ATTACH THE ROPE TRACK

1) Take the piece of aluminium angle that is 1500mm long. On the face with straight edges, measure and drill using a 4mm drill bit, 5 holes as shown in **Figure 1**
2) The centre and 2 outside holes are 35 mm up from the edge. The 2 lower holes are 10mm up from the edge. **See Figure 1**
3) Place against the front inside edge of the tub with the angle facing inside the tub. With the aluminium level with the top of the tub drill through the holes into the tub, starting from the centre hole. Rivet into place as you drill the holes.
4) Take the two side aluminium angles that are 475mm long. With a 4mm drill bit measure and drill 2 holes on each part, 90mm and 415mm on the face with straight edges from the front. **See Figure 2**
5) Drill and rivet the two side pieces of angle into place on both sides of the piece already attached in step. Silicon where the aluminium angle meets the inside edge of the tub and where the two side angles join the larger piece. **See Figure 3**
6) Line up the rope track with the edge front angle with the 'C' channel facing forward (as shown in Figure 4). Centralise the rope track. **See Figure 4**
7) With a 4mm drill bit, Drill 5 holes evenly spaced in the rope track and into the aluminium angle.
8) Clean any swarf from the drilling process. Insert all rivets into place before securing the rope track using your rivet gun.

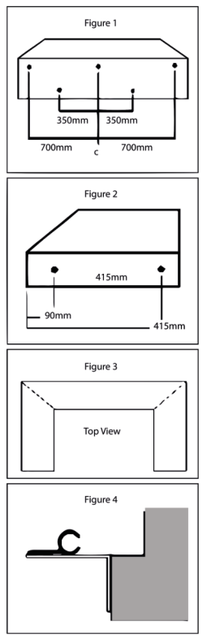

3 to 7 • As per respective pages

APPENDIX. MITSUBISHI

10926 MITSUBISHI TRITON MQ/MR Dual Cab (NO SPORTS BAR)

1 ATTACH THE FRONT RAIL

STEP 1

• On the Front Rail, Measure the 6 points vertically in-line with the 6 rivets already in place, 25mm from the bottom of the aluminium and drill each point using a 4mm drill bit.

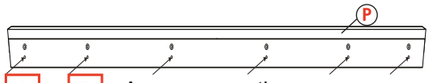

3 to 7 • As per respective pages

Additional Parts

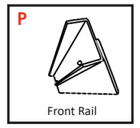

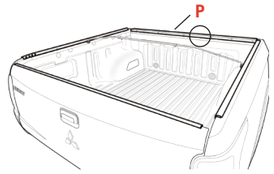

STEP 2

• Place the Front Rail on the front top edge of the tub and now drill through each of the 6 drilled holes into the tub.
• Using the provided rivets, rivet the aluminium rail in place.

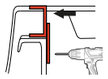

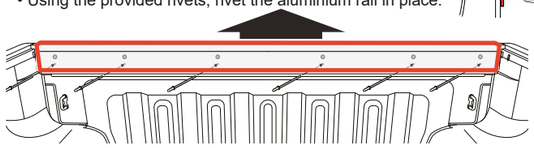

10907 MITSUBISHI Triton MQ/MR Dual Cab (WITH SPORTS BAR)

1 ATTACH THE FRONT RAIL

STEP 1

Remove the front sports bar bolts to fit in the front aluminium rail using a 13mm spanner (These bolts will be re-fitted after **STEP 2**). See below

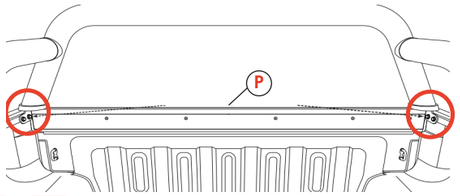

3 to 7 • As per respective pages

Additional Parts

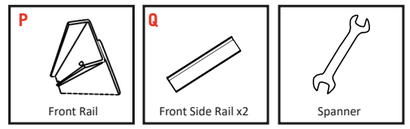

STEP 2

• Place the Front Rail on the front top edge of the tub and now drill through each of the 6 drilled holes into the tub.
• Using the provided rivets, rivet the aluminium rail in place.

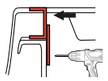

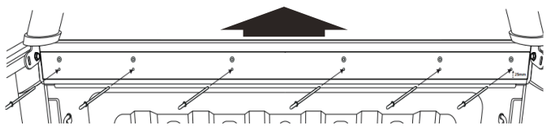

10642 TRITON MQ/MR DUAL CAB - (WITH HEADBOARD)

1 PREPARE THE ROPE TRACK

• Place the 2 pieces of dowel in the ends of the rope track. Ensure the flat side of the aluminium is the surface positioned against the face of the headboard. With the Dowels inserted approx. Halfway into the rope track ends rest the aluminium rope track on the side rails.

Additional Parts

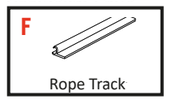

2 ATTACH THE ROPE TRACK TO HEADBOARD

• While pushing against the rope track use a 4 mm drill bit to drill 5 holes, one into each upright of the headboard. The first hole at each end should be 25mm from the edge of the aluminium rope track.
• Rivet the aluminium rope track into place.
• Last, Squeeze silicon along the bottom and side edges of the flat aluminium to fill the gap between the tub and aluminium.

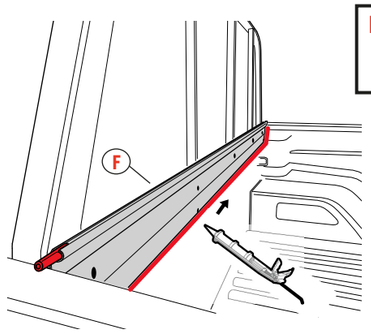

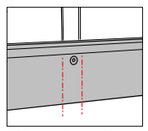

Rivet location on headboard

3 to 7 • As per respective pages

APPENDIX. VOLKSWAGEN AMAROK (VW)

10881 VW DUAL CAB (WITH SPORTBARS)
&
11065 VW DUAL CAB (WITH FACTORY ULTIMATE CANYON SPORTBARS)

1 ATTACH THE ROPE TRACK

STEP 1

• Ensure the gap between the sports bars is between 664mm and 669mm. If the gap is outside of these measurements adjust the sports bars accordingly.
• Rest the aluminium rope track (F) on the top of the front edge of the Tub, with the 'C' channel facing the cabin.

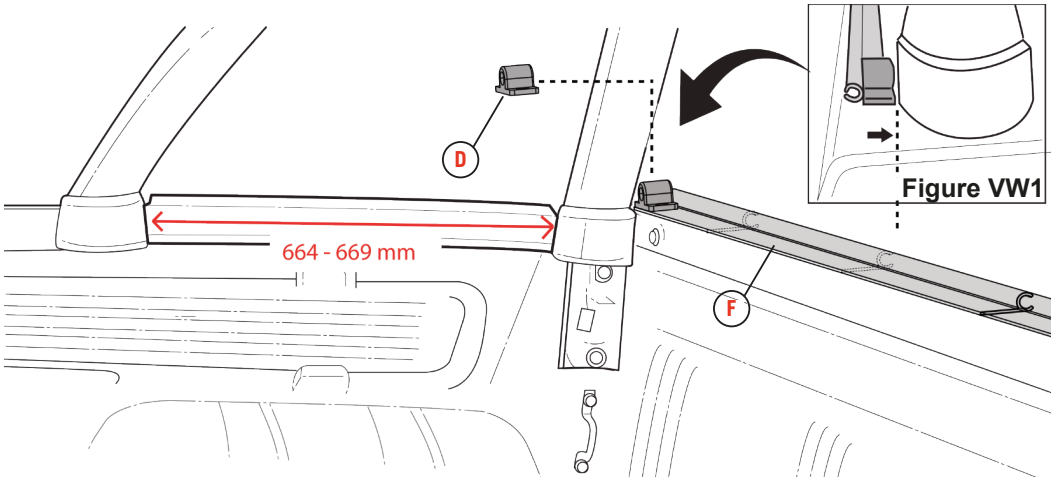

STEP 2

• To get the correct space between the sports bar and rope track - Place one bar bracket, so (D) sits between the sports bar and the back open section of the rope track (F). **Refer Figure VW1**
• Drill 5 holes (4mm drill bit) evenly spaced through the aluminium rope track (F) and into the tub. **Refer Figure VW2. NOTE: First hole at each end of Rope Track to be 100mm distance inwards.**

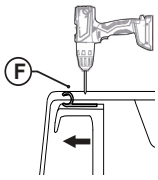

Figure VW2

3 to 7 • As per respective pages

5 FIT THE TONNEAU COVER

STEP 3

• The VW 10881 Cover includes sewn-in magnetic fasteners to the tub to ensure a premium finish tonneau appearance around the Sport bars.

To protect the vehicle's duco, apply the paint protection adhesives to the points the magnets contact the tub.
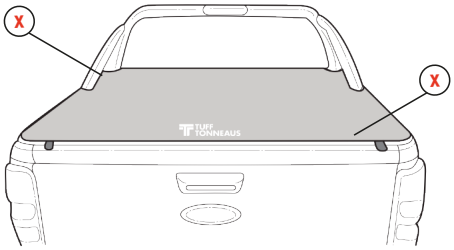
Additional Parts